Bipolar disorder: leads from the molecular and cellular mechanisms of action of mood stabilisers

HUSSEINI K. MANJI, GREGORY J. MOORE and GUANG CHEN

Background New research is dramatically altering our understanding of the molecular mechanisms underlying neuronal communication.

Aim To elucidate the molecular mechanisms underlying the therapeutic effects of mood stabilisers.

Method Results from integrated clinical and laboratory studies are reviewed.

Results Chronic administration of lithium and valproate produced a striking reduction in protein kinase C (PKC) isozymes in rat frontal cortex and hippocampus. In a small study, tamoxifen (also a PKC inhibitor) had marked antimanic efficacy. Both lithium and valproate regulate the DNA binding activity of the activator protein I family of transcription factors. Using mRNA differential display, it was also shown that chronic administration of lithium and valproate modulates expression of several genes. An exciting finding is that of a robust elevation in the levels of the cytoprotective protein, bcl-2.

Conclusions The results suggest that regulation of signalling pathways may play a major part in the long-term actions of mood stabilisers. Additionally, mood stabilisers may exert underappreciated neuroprotective effects.

Declaration of interest Support from the National Institute of Mental Health, The Stanley Foundation, NARSAD and the Joseph Young Sr Foundation.

Despite well-established genetic diatheses and extensive research, the biochemical abnormalities underlying the predisposition to and the pathophysiology of bipolar disorder have yet to be clearly established. Early biological explanations of bipolar disorder implicated neurotransmitters, in particular the biogenic amines. However, advances in our understanding of the cellular mechanisms underlying neuronal communication have shifted the focus of research onto the role of post-receptor sites. Indeed, the 'molecular medicine revolution' has increased our understanding of the pathophysiological basis of a variety of medical disorders. This remarkable progress is largely attributable to the elucidation of the basic mechanisms of signal transduction, and the application of the powerful tools of molecular biology to the study of human disease. Hundreds of guanine-nucleotide-binding (G) protein-coupled receptors and over a dozen G proteins and effectors have now been characterised at the molecular and cellular level (Spiegel, 1998). This has allowed the study of a variety of human diseases which are caused by loss- and gain-of-function mutations; studies of such diseases offer unique insights into the physiological and pathophysiological functioning of many cellular transmembrane signalling pathways.

BACKGROUND

The role of G protein-coupled signal transduction pathways in human disease

G proteins are a ubiquitous family of proteins that serve the critical role of transducers of information across the plasma membrane, coupling receptors to various effectors. It has been estimated that about 80% of all known hormones, neurotransmitters and neuromodulators elicit cellular responses through G proteins coupled to a variety of intracellular effectors.

Given their widespread and crucial roles in the regulation of physiological functions, it is not surprising that alterations in G protein-coupled signal transduction pathways have been implicated in a variety of pathophysiological states: the interested reader is referred to Spiegel *et al* (1993), Shenker (1995) and Spiegel (1998) for excellent reviews. Loss- and gain-of-function mutations in G protein-coupled receptors have been identified in such diverse conditions as retinitis pigmentosa, nephrogenic diabetes insipidus, familial adrenocorticotrophic hormone (ACTH) resistance, congenital bleeding, Hirschsprung's disease, hypergonadotrophic ovarian failure, central hypothyroidism, growth hormone deficiency and familial male precocious puberty (reviewed in Shenker, 1995; Spiegel, 1998). Furthermore, a variety of clinical conditions have been demonstrated to arise from alterations in the functioning of G protein subunits (Table 1) (Weinstein & Shenker, 1993; Weinstein, 1994*a*,*b*). It should be noted that G protein dysfunction appears to be the primary initiating event in Albright's hereditary osteodystrophy, McCune–Albright syndrome and some endocrine tumours. In several other conditions (including hyper- and hypothyroidism, and states associated with altered glucocorticoid or gonadal steroid levels), the G protein abnormalities are probably secondary, but none the less are implicated in the pathophysiology of the condition (Manji, 1992; Weinstein & Shenker, 1993; Weinstein, 1994*a*,*b*). For example, hypothyroidism is associated with increased levels of the inhibitory G protein (G_i) and decreased levels of the stimulatory G protein (G_s) in most tissues examined, including brain (Manji, 1992; Weinstein, 1994*a*,*b*). These biochemical changes are thought to be responsible (at least in part) for the impaired lipolysis and thermogenesis observed in hypothyroidism, and may also have a role in the cognitive/psychological symptoms frequently observed. Indeed, the major effects that many hormones (including thyroid, glucocorticoids and gonadal steroids) have on signalling pathways suggest that these biochemical effects may mediate some of the observed clinical features of bipolar disorder (e.g. onset in puberty, triggering of episodes in the post-partum period, association with alterations in endogenous thyroid hormone levels and response to exogenous glucocorticoids).

The G protein-coupled signalling pathways first amplify and 'weight' extracellularly

https://doi.org/10.1192/bjp.178.41.s107 Published online by Cambridge University Press

Table 1 Abnormalities of signalling molecules associated with clinical conditions

Pseudohypoparathyroidism	$G\alpha_s$
McCune–Albright syndrome	$G\alpha_s$
Acromegaly	$G\alpha_s$
Hyperfunctional thyroid nodules	$G\alpha_s$
Ovarian and adrenocortical tumours	$G\alpha_{i2}$
Congenital stationary night blindness	$G\alpha_{i1}$
Right ventricular outflow tachycardia	$G\alpha_{i2}$
Animal model of ulcerative colitis	$G\alpha_{i2}$
Hypertension	$G\beta$
Drosophila learning and memory	Adenylate cyclase
	PKC
	CREB
Heart failure	βARK
Drosophila retinal degeneration	Arrestin
Amphetamine administration	RGS
Circadian arrhythmicity	Transcription factors

PKC, protein kinase C; CREB, cAMP response element binding protein; βARK, β-adrenergic receptor kinase; RGS, regulators of G protein signalling.

generated neuronal signals and then transmit these integrated signals to effectors, thereby forming the basis for a complex information processing network (Ross, 1989; Manji, 1992; Bourne & Nicoll, 1993). Since a single receptor subtype can be coupled to a number of G proteins, and several G proteins can converge to activate or inactivate a single effector (Ross, 1989; Taylor, 1990; Manji, 1992; Bourne & Nicoll, 1993), these signalling pathways form complex networks. These networks facilitate the integration of signals across multiple time-scales, the generation of distinct outputs depending on input strength and duration, and regulate feed-forward and feedback loops (Bhalla & Lyengar, 1999; Weng *et al*, 1999). The complexity generated by the interactions of G protein-coupled receptors may be one mechanism by which neurons acquire the flexibility for generating the wide range of responses observed in the nervous system. This has led to the proposal that G protein-coupled signal transduction pathways may be critically involved in the neuronal circuits regulating such diverse vegetative functions as mood, appetite and wakefulness and, by extrapolation, in the cellular mechanisms of action of mood-stabilising agents.

In contrast to the progress that has been made in elucidating many other medical conditions, we have yet to identify the specific abnormal genes or proteins in bipolar disorders. Genetic linkage studies suggesting the involvement of specific genes and gene products in bipolar disorder have elicited considerable excitement about the possibilities for improved treatment of this condition (Gurling *et al*, 1995; Gelerntner, 1995; Berrettini *et al*, 1997; Nurnberger & Berrettini, 1998; Barondes, 1998). Like other common and complex diseases such as diabetes (Davies *et al*, 1994; Aitman & Todd, 1995) and hypertension (Thibonnier & Schork, 1995; O'Connor *et al*, 1996), the transmission of bipolar disorder appears to be multi-factorial in nature rather than the result of simple Mendelian inheritance (discussed in Philbert *et al*, 1997). A recent study has even provided evidence for a locus for mental health wellness, on chromosome 4p at D4S2949, in pedigrees exhibiting high rates of bipolar disorder (Ginns *et al*, 1998). These data suggest that the bipolar disorder phenotype may arise from a complex interplay of not only genetic and environmental risk factors, but also genetic and environmental protective factors. Moreover, differences in diagnostic criteria and aetiological heterogeneity may account for the failure to replicate many older linkage studies in bipolar disorder. More recently, several independent research groups have reported linkage of bipolar disorder to disparate chromosomal regions – 4p (Blackwood *et al*, 1996), 6p, 13q and 15q (Ginns *et al*, 1996) and 18q (Freimer *et al*, 1996). An accompanying commentary by Risch & Botstein (1996) attributed much of the uneven findings to the complex genetic mechanisms underlying the disease. Linkage studies will undoubtedly continue to be an important means of exploring the aetiology and potentially the selective treatment responsiveness of bipolar disorder; nevertheless, there is a growing consensus that other methods are needed to identify the biochemical pathways underlying the pathophysiology of what is arguably the most complex of all neuropsychiatric disorders. Indeed, it is becoming increasingly apparent that a true understanding of the pathophysiology of bipolar disorder must address its neurobiology at different physiological levels – molecular, cellular, systemic and behavioural (Manji & Lenox, 2000). Abnormalities in gene expression undoubtedly underlie the neurobiology of the disorder at the molecular level, and this will become evident from identification of the susceptibility and protective genes for bipolar disorder in the coming years. This must be followed by the even more difficult task of examining the impact of the faulty expression of these gene products (proteins) on integrated cell function. It is at these levels that recent studies have identified certain proteins as potential targets for the actions of mood-stabilising drugs.

There are, however, several impediments to the elucidation of the molecular and cellular mechanisms of action of mood stabilisers. First, no suitable experimental model of bipolar disorder is available, and many studies are of necessity conducted in normal rodents. Animal models of drug dependence have probably been instrumental in the pace of research on their molecular mechanisms (Hyman & Nestler, 1996). Second, a problem in the identification of therapeutically relevant target genes for the actions of mood stabilisers is the lack of easily detectable phenotypic changes induced by these agents (Ikonomov & Manji, 1999). This makes the task of ascribing functional significance to the multiple treatment-induced changes at the genomic level daunting. Moreover, establishing the genetic basis of mood as a quantitative trait is still at its inception (Flint & Corley, 1996) and we therefore cannot focus on a group of already known genes. Finally, there is the dearth of knowledge concerning the neuronal circuits and pathways involved in the pathophysiology of what is probably a group of complex, heterogeneous disorders with overlapping symptom clusters, subsumed under the rubric of 'manic–depressive illness' or 'bipolar disorder'.

Despite these formidable obstacles, progress is being made, using advanced cellular and molecular biological strategies to identify changes in signalling pathways and

https://doi.org/10.1192/bjp.178.41.s107 Published online by Cambridge University Press

gene expression that may have therapeutic relevance in the long-term treatment of bipolar disorder. This article looks at recent research on the molecular mechanisms underlying the therapeutic effects of mood stabilisers. For discussion of some of the other signalling pathways that have been implicated in the pathophysiology and treatment of bipolar disorder, readers are referred to reviews by Wang *et al*, (1997); Jope (1999); Li *et al* (2000); Post *et al* (2000) and Warsh *et al* (2000).

LITHIUM AS A MOOD STABILISER IN THE TREATMENT OF BIPOLAR DISORDER

Our research laboratory has been extensively involved in the identification of specific proteins and regulatory processes involved in the action of mood-stabilising agents, particularly the monovalent cation that has had a profound effect on the lives of millions – lithium (Goodwin & Jamison, 1990; Baldessarini & Tondo, 2000). The discovery of lithium's efficacy as a mood-stabilising agent revolutionised the treatment of patients with bipolar disorder – indeed, it has reshaped not only medical and scientific ideas, but also popular concepts of severe mental illness (Manji *et al*, 2000*a*). After nearly three decades of use in North America, lithium continues to be the mainstay of treatment for bipolar disorder, both for the acute manic phase and as prophylaxis for recurrent manic and depressive episodes (Goodwin & Jamison, 1990; Baldessarini *et al*, 1997; Davis *et al*, 1999; Baldessarini & Tondo, 2000). Numerous placebo-controlled studies have strongly suggested the efficacy of lithium in the long-term prophylactic treatment of bipolar disorder, and the beneficial effects appear to involve a reduction in the number of episodes as well as in their intensity (reviewed in Goodwin & Jamison, 1990; Davis *et al*, 1999; Baldessarini & Tondo, 2000). There is compelling evidence that adequate lithium treatment, particularly when given in the context of a specialist clinic, also reduces the excessive mortality observed in the illness (Muller-Oerlinghausen *et al*, 1992; Baldessarini *et al*, 1997; Nilsson, 1999).

Despite lithium's role as one of psychiatry's most important treatments, the cellular and molecular basis for its beneficial effects have yet to be elucidated (Bunney & Garland-Bunney, 1987; Jope & Williams, 1994; Manji *et al*, 2000*a*). Although a number of acute effects of lithium have been identified *in vitro*, its therapeutic effects in the treatment of bipolar disorder are only seen after chronic administration, thereby precluding any simple mechanistic interpretations based on its acute biochemical effects. The search for the mechanisms of action of mood-stabilising agents has been facilitated by a growing appreciation that, rather than any single neurotransmitter system being responsible for depression or mania, many interacting and overlapping systems are involved in regulating mood, and the most effective drugs are unlikely to work on any particular neurotransmitter system in isolation but, rather, affect the functional balance between interacting systems. Signal transduction pathways are therefore an attractive target to explain lithium's efficacy in treating multiple aspects of bipolar disorder (Jope & Williams, 1994; Manji *et al*, 2000*a*), and consequently recent research into the effects of mood-stabilising agents has focused upon second-messenger generating systems and gene expression (Mork *et al*, 1992; Jope & Williams, 1994; Wang *et al*, 1997; Jope, 1999; Manji *et al*, 1999, 2000*a*; Li *et al*, 2000; Warsh *et al*, 2000).

Lithium and the phosphoinositide cycle: is the inositol depletion hypothesis a valid model?

In the 1990s research on the cellular mechanisms underlying lithium's therapeutic effects focused extensively upon receptor-coupled hydrolysis of phosphatidylinositol 4,5-bisphosphate (PIP_2). Although inositol phospholipids are relatively minor components of cell membranes, they have a major role in receptor-mediated signal transduction pathways, and are involved in a diverse range of responses in the central nervous system (reviewed in Baraban *et al*, 1989; Berridge & Irvine, 1989; Catt & Balla, 1989; Chuang, 1989; Rana & Hokin, 1990; Fisher *et al*, 1992). Activation of a variety of neurotransmitter receptor subtypes (including muscarinic M_1, M_3 and M_5, noradrenergic α_1, serotonergic 5-HT_2 and several metabotropic glutamatergic receptors) induces the hydrolysis of membrane phospholipids. In brief, agonists such as acetylcholine, noradrenalin (noradrenalin), serotonin or glutamate bind to specific cell surface receptors, which interact with G proteins to stimulate phospholipase Cβ (PLCβ). Activated PLC catalyses the conversion of PIP_2 to two second messengers, inositol 1,4,5-trisphosphate (IP_3) and diacylglycerol (DAG): IP_3 stimulates the mobilisation of intracellular calcium ions, while DAG activates protein kinase C (PKC). The trisphosphate can be phosphorylated and dephosphorylated, leading to other inositol phosphate compounds or to unphosphorylated inositol. Inositol is then converted to phosphatidylinositol (PI), which in turn is phosphorylated to phosphatidylinositol phosphate (PIP) and PIP_2 (Fig. 1).

The ability of a cell to maintain sufficient supplies of *myo*-inositol (*m*I) is crucial to the resynthesis of the phosphoinositides, and the maintenance and efficacy of signalling. Lithium, at therapeutically relevant concentrations, is an inhibitor of inositol monophosphatase (K_i 0.8 mmol/L), and results in an accumulation of inositol 1-monophosphate as well as a reduction in free inositol (Allison & Stewart, 1971; Hallcher & Sherman, 1980). Lithium also inhibits inositol polyphosphate-1-phosphatase, which is involved in recycling inositol polyphosphates to inositol. Furthermore, since the mode of enzyme inhibition is uncompetitive, lithium's effects have been postulated to be most pronounced in systems undergoing the highest rate of PIP_2 hydrolysis (see reviews by Nahorski *et al*, 1991, 1992). Thus, Berridge and associates first proposed that the physiological consequence of lithium's action is derived through a depletion of free inositol, and that its selectivity could be attributed to its preferential action (due to the uncompetitive nature of the inhibition) on the most overactive receptor-mediated neuronal systems (Berridge *et al*, 1982, 1989). However, numerous studies have examined the effects of lithium on receptor-mediated PI responses, and although some report a reduction in agonist-stimulated PIP_2 hydrolysis in rat brain slices following acute or chronic lithium administration, these findings have often been small and inconsistent, and subject to numerous methodological differences – see Jope & Williams (1994) for an excellent review. Additionally, several lines of evidence suggest that the action of chronic lithium treatment may not simply be directly manifested in receptor-mediated PI turnover. While investigators have observed that the levels of inositol in brain remain reduced in rats receiving chronic lithium, it has been difficult to demonstrate that this results in a reduction in the

https://doi.org/10.1192/bjp.178.41.s107 Published online by Cambridge University Press

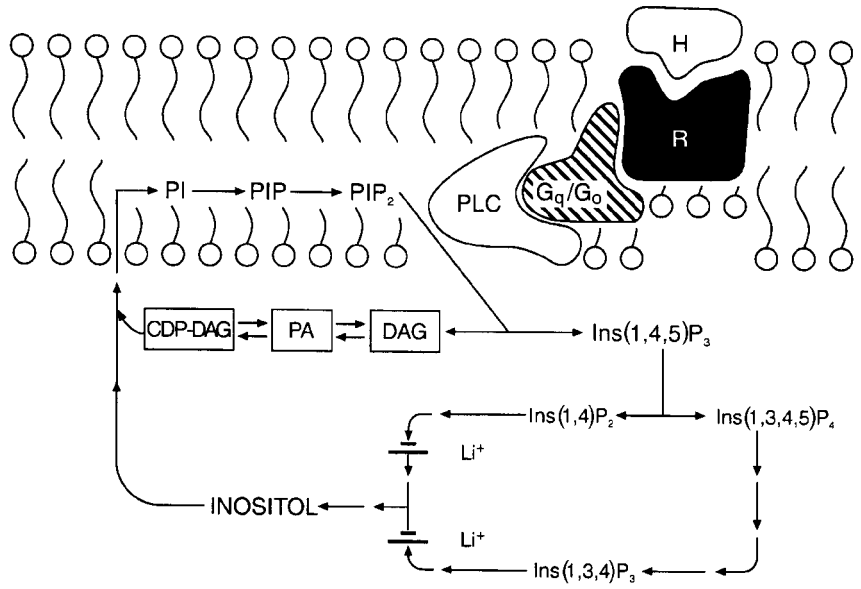

Fig. 1 The phosphoinositide cycle. The binding of a hormone or agonist (H) to receptor (R) activates G proteins which stimulate phospholipase C (PLC); PLC hydrolyses phosphatidylinositol 4,5-bisphosphate (PIP_2) to the two second messengers diacylglycerol (DAG) and inositol 1,4,5-trisphosphate ($Ins(1,4,5)P_3$). $Ins(1,4,5)P_3$ stimulates the mobilisation of calcium $[Ca^{2+}]_{ii}$ and DAG activates protein kinase C (PKC). $Ins(1,4,5)P_3$ can be further phosphorylated to $Ins(1,3,4,5)P_4$ or dephosphorylated to $Ins(1,4)P_2$. Subsequent dephosphorylations recycle inositol phosphates to inositol. Two phosphatases are inhibited uncompetitively by lithium, inositol polyphosphate-1-phosphatase (which dephosphorylates $Ins(1,3,4)P_3$ and $Ins(1,4)P_2$ to $Ins(3,4)P_2$ and Ins(4)P), and inositol monophosphatase (which dephosphorylates inositol monophosphates Ins(1)P, Ins(3)P, and Ins(4)P to inositol). Free inositol (along with cytidine monophosphate phosphatidate (CMP-PA)) is essential for the synthesis of phosphatidylinositol (PI) and PIP_2; CDP, cytidine 5′-diphosphate.

resynthesis of PIP_2, which is the substrate for agonist-induced PI turnover (reviewed in Jope & Williams, 1994).

A series of studies have recently been undertaken to determine if lithium does indeed reduce the levels of *m*I in critical brain regions of individuals with bipolar disorder (despite the attractiveness of the inositol depletion hypothesis, it has never been demonstrated to occur in human brain), and if so, whether these reductions are associated with its therapeutic effects.

Proton magnetic resonance spectroscopy (MRS) spectra were acquired from 8cc regions of interest (ROIs) in the frontal, temporal, parietal and occipital lobes, with an acquisition time of 5 min/ROI (STEAM pulse sequence TE 30 ms, TM 13.7 ms, TR 2000 ms (Frahm *et al*, 1987) Fig. 2). Using proton MRS, we have been able to quantitate regional brain *m*I concentrations with excellent reliability (Moore *et al*, 1999). Using a test–retest design (scan interval range 1–12 weeks) in six healthy volunteer subjects, the brain *m*I concentration (expressed in units of $mI \times 10^4$/brain water and reported as the mean (standard error)) was 2.57 (0.28) *v.* 2.50 (0.24) with a mean difference of 0.07 or $\pm 3\%$ of the *m*I measure, demonstrating that the temporal stability and test–retest reliability of this measure are remarkably good. In order to evaluate the interrater reliability of this method, two trained individuals analysed the *in vivo* magnetic resonance data with MRUI-VARPRO time domain spectral analysis software (Van den Boogaart *et al*, 1994; de Beer *et al*, 1992). The individuals were masked to the study information and to each other's results. Intraclass correlation coefficient analysis revealed an interrater reliability of more than 98%.

After extensive validation for *in vivo* measurement of regional brain *m*I concentration as well as careful determination that the 1.5 T *m*I resonance is indeed predominately *m*I ($\geqslant 80\%$) (Moore *et al*, 1999), this method has been applied in studies of bipolar disorder. Following medication wash-out ($\geqslant 2$ weeks), MRS scans were performed in patients at three time points: baseline; after 5 days of lithium treatment; and after 4 weeks of lithium treatment. It was found that therapeutic administration of lithium did indeed produce significant reductions in *m*I levels in brain regions that had previously been implicated in the pathophysiology of bipolar disorder (Moore *et al*, 1999). However, the major lithium-induced *m*I reductions are observed after only 5 days of lithium administration, at a time when the patient's clinical state is completely unchanged.

Consequently, although lithium does reduce *m*I levels (Jope & Williams, 1994), this reduction *per se* is not associated with a therapeutic response. Although the inositol depletion hypothesis as originally articulated does not receive support from this longitudinal human study, it remains an attractive working hypothesis that some of the initial actions of lithium may occur with the relative depletion of *m*I (Godfrey *et al*, 1989; Pontzer & Crews, 1990; Kofman & Beimaker, 1990, 1993; Tricklebank *et al*, 1991). This relative depletion of *m*I may initiate a cascade of secondary changes at different levels of the signal transduction process and gene expression in the central nervous system, effects that are ultimately responsible for lithium's therapeutic efficacy (Manji & Lenox, 1999). Studies are in progress to determine if the lithium-induced reductions in *m*I levels are associated with components of ultimate therapeutic response.

Lithium, valproate and the PKC signalling cascade: implications for the development of novel drugs for bipolar disorder

The PKC signalling pathway is also a target for the actions of chronic lithium (reviewed in Hahn & Friedman, 1999; Jope, 1999; Manji & Lenox, 1999, 2000). PKC is highly enriched in brain, and plays a major role in regulating pre- and post-synaptic aspects of neurotransmission (Huang, 1989; Stabel & Parker, 1991; Nishizuka, 1992). It is now known to exist as a family of closely related sub-species, has a heterogeneous distribution in brain (with particularly high levels in presynaptic nerve terminals) and plays a major part in the regulation of neuronal excitability, neurotransmitter release and long-term alterations in gene expression and plasticity (Huang, 1989; Stabel & Parker, 1991; Nishizuka, 1992). Evidence accumulating from various laboratories has demonstrated that lithium exerts significant effects on PKC in a number of cell systems including the brain (reviewed in

https://doi.org/10.1192/bjp.178.41.s107 Published online by Cambridge University Press

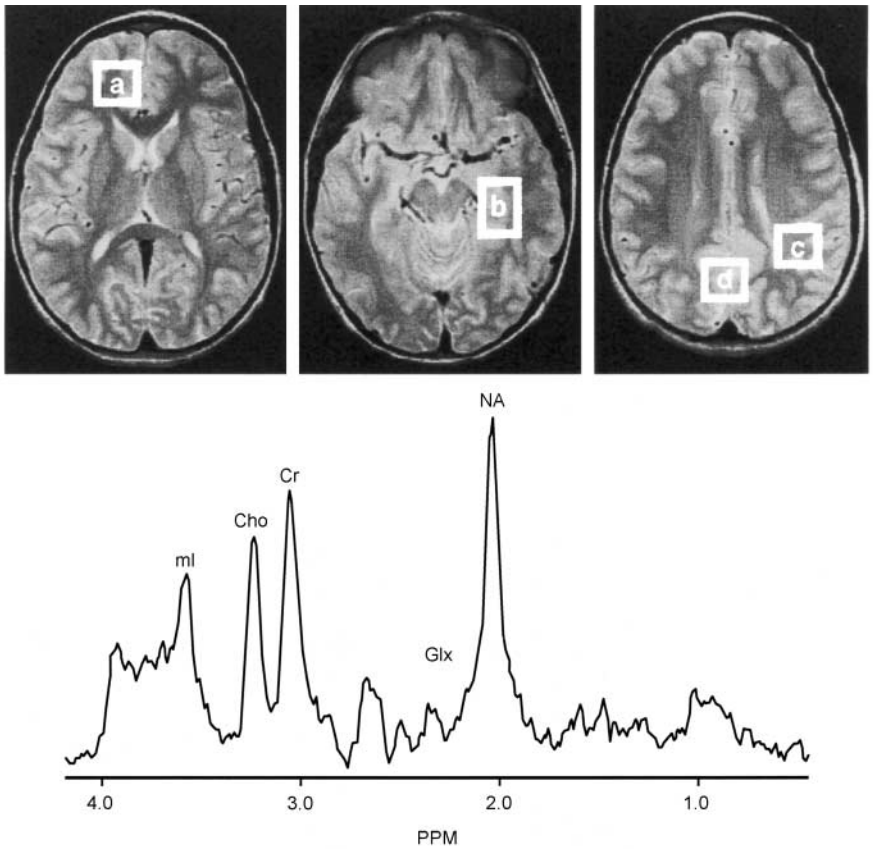

Fig. 2 Brain regions examined and typical proton magnetic resonance spectrum (MRS). Regions of interest: (a) frontal lobe, (b) temporal lobe, (c) parietal lobe, (d) occipital lobe. Lower panes: frontal lobe proton MRS from a bipolar disorder patient. PPM, parts per million, *mI*, *myo*-inositol; cho, choline compounds; Cr, creatine compounds; Glx, glutamate/glutamine/GABA; NA, *N*-acetyl compounds.

Hahn & Friedman, 1999; Jope, 1999; Manji & Lenox, 1999, 2000). Most of the currently available data suggest that chronic lithium exposure results in an attenuation of phorbol ester-mediated responses, which may be accompanied by a downregulation of PKC isozymes in the brain (reviewed in Hahn & Friedman, 1999; Jope, 1999; Manji & Lenox, 1999, 2000). Using quantitative autoradiographic techniques, it has been demonstrated that chronic lithium administration results in a significant decrease in membrane-associated PKC in several hippocampal structures. This is accompanied by isozyme-specific decreases in PKC-α and -ε (which have been particularly implicated in facilitating neurotransmitter release), in the absence of significant alterations in PKC-β, PKC-γ, PKC-δ or PKC-ζ (Manji *et al*, 1993, 2000*a*). Concomitant studies carried out in immortalised hippocampal cells in culture exposed to chronic lithium show a similar reduction in the expression of both the PKC-α and -ε isozymes in the cell as determined by immunoblot (Manji & Lenox, 1999). Chronic lithium has also been demonstrated to dramatically reduce the hippocampal levels of a major PKC substrate myristoylated alanine-rich C kinase substrate (MARCKS), which has been implicated in regulating long-term neuroplastic events (Lenox *et al*, 1992). Do these effects of lithium on PKC isozymes have any clinical relevance? Given the key role of PKC isozymes in the regulation of neuronal excitability and in neurotransmitter release, the possibility that inhibition of these isozymes represents the biochemical effect most therapeutically relevant for lithium's antimanic effects is a heuristic and testable hypothesis (discussed in more detail below). Although these effects of lithium on PKC isozmes and MARCKS are striking, a major problem inherent in neuropharmacological research is the difficulty in attributing therapeutic relevance to any observed biochemical finding. It is thus noteworthy that the structurally dissimilar antimanic agent, valproate, produces very similar effects to those of lithium on PKC-α and -ε isozymes and MARCKS protein (Chen *et al*, 1994; Watson *et al*, 1998; Manji & Lenox, 1999; Manji *et al*, 2000*a*). Interestingly, lithium and valproate appear to act on the PKC signalling pathway by different mechanisms (Manji & Lenox, 1999); these biochemical observations are consistent with the clinical observations that some patients show a preferential response to one or other of the agents, and that additive therapeutic effects are often observed when the two agents are co-administered (Freeman & Stoll, 1998).

Are PKC inhibitors effective in the treatment of acute mania?

To date, only a few studies have directly examined PCK in bipolar disorder (Hahn & Friedman, 1999). Friedman and associates investigated PCK activity and PKC translocation in response to serotonin in platelets obtained from patients with bipolar disorder before and during lithium treatment (Friedman *et al*, 1993). The ratios of platelet membrane-bound to cytosolic PKC activities were elevated in the manic group, in whom serotonin-elicited platelet PKC translocation was also enhanced. With respect to brain tissue, Wang & Friedman (1996) measured PKC isozyme levels, activity and translocation in post-mortem brain tissue from patients who had bipolar disorder; PKC activity and translocation were greater than in control samples, as were cortical levels of selected PKC isozymes.

In view of the pivotal role of the PKC signalling pathway in the regulation of neuronal excitability, neurotransmitter release and long-term synaptic events (Nishizuka, 1992; Stabel & Parker, 1991; Huang, 1989; Conn & Sweatt, 1994), it was postulated that the attenuation of PKC activity may have a major role in the antimanic effects of lithium and valproate. There was thus a clear need to investigate the efficacy of PKC inhibitors in the treatment of mania. There is currently only one relatively selective PKC inhibitor available for human use – tamoxifen. This is a synthetic, non-steroidal antioestrogen widely used in the treatment of breast cancer (Catherino & Jordan, 1993; Jordan, 1994). A number of the effects of tamoxifen are due to oestrogen-receptor antagonism (Jordan, 1994), but it has become clear in recent years that it is also a potent PKC inhibitor at therapeutically relevant concentrations (Couldwell *et al*, 1993). A pilot study investigating the efficacy

https://doi.org/10.1192/bjp.178.41.s107 Published online by Cambridge University Press

of tamoxifen in the treatment of acute mania found that this agent does indeed possess antimanic efficacy (Bebchuk *et al*, 2000) (Fig. 3). Despite the small sample size, the results are intriguing, and support the hypothesis that the antimanic effects of lithium and valproate are mediated by PKC inhibition. In view of the apparent involvement of the PKC signalling system in the pathophysiology of bipolar disorder (Friedman *et al*, 1993; Wang & Friedman, 1996), these results indicate that PKC inhibitors may be useful agents in its treatment. Larger, double-blind, placebo-controlled studies of tamoxifen and of novel selective PKC inhibitors in the treatment of mania are clearly warranted.

EFFECTS OF MOOD STABILISERS ON TRANSCRIPTION FACTORS AND GENE EXPRESSION

It has become increasingly appreciated that biochemical models proposed for the effects of many psychotropic drugs (including mood stabilisers, antidepressants and antipsychotics) must attempt to account for their special temporal clinical profile – in particular, that the therapeutic effects require a lag period for onset of action, and are generally not immediately reversed upon discontinuation (Hyman & Nestler, 1996; Duman *et al*, 1997; Jope, 1999; Manji *et al*, 1999, 2000*a*). Patterns of effects requiring such prolonged administration of the drug suggest alterations at the genomic level (Manji *et al*, 1995; Human & Nestler, 1996; Duman *et al*, 1997). To investigate the putative effects of mood stabilisers on gene expression, their effects on the DNA binding activity of transcription factors, especially the activator protein 1 (AP-1) family of transcription factors, were examined. The AP-1 factors are a collection of homodimeric and heterodimeric complexes composed of products from two transcription factor families, Fos and Jun. These products bind to a common DNA site, known as the 12-O-tetradecanoylphorbol-13-acetate (TPA) response element (TRE), in the regulatory domain of the gene, and activate gene transcription in response to PKC activators, growth factors, cytokines and other agents (including neurotransmitters) (Karin & Smeal, 1992; Hughes & Dragunow, 1995). Induction of c-*fos* is rapid and transient: Fos protein reaches its maximal levels within 30 minutes, and decreases to low levels within 1–2 hours (Hughes & Dragunow, 1995). Induction of c-*jun* is longer-lasting and varies from a few hours to several days, depending on the cell type and the stimulus (Hughes & Dragunow, 1995). The c-*jun* gene is subject to positive autoregulation through an AP-1 binding site in its promoter. The genes known to be regulated by the AP-1 family of transcription factors in the brain include genes for various neuropeptides, neurotrophins, receptors, transcription factors, enzymes involved in neurotransmitter biosynthesis and proteins that bind to cytoskeletal elements (Hughes & Dragunow, 1995).

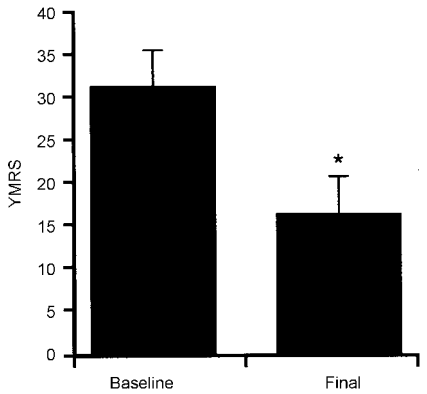

Fig. 3 Effects of tamoxifen in the treatment of acute mania. Tamoxifen was administered to 10 subjects with acute mania in blinded form; raters were blind to the treatment regimen. Main outcome measures included the Young Mania Rating Scale (YMRS), the Clinician Administered Rating Scale for Mania and the Hamilton Rating Scale for Depression. Tamoxifen resulted in a significant decrease in manic symptomatology rated by the YMRS (*$P < 0.05$). Figure reproduced, with permission, from data in Bebchuk *et al* (2000).

Several independent laboratories have demonstrated that lithium, at therapeutically relevant concentrations, regulates AP-1 DNA binding activity (Williams & Jope, 1995; Jope & Song, 1997; Ozaki & Chuang, 1997; Unlap & Jope, 1997; Yuan *et al*, 1998; Chen *et al*, 1999*a*). The effects of lithium and valproate on the DNA binding activity of AP-1 were examined using methods verified by both competition assay with cold and mutant TRE oligos and supershift assay with antibodies against AP-1 transcription factors (Yuan *et al*, 1998; Chen *et al*, 1999*a*). Both lithium and valproate at therapeutically relevant concentrations, produced a time- and concentration-dependent increase in the DNA binding of TRE to AP-1 transcription in rat brain *ex vivo*, and in cultured human neuroblastoma cells factors (Yuan *et al*, 1998; Chen *et al*, 1999*a*). It was further confirmed that these effects on AP-1 DNA binding activity do, in fact, translate into changes at the gene expression level. Effects of lithium on gene expression were first studied in cells transiently transfected with the pGL2 control vector. The reporter gene, luciferase in the pGL2 control vector, is driven by simian virus 40 (SV40) promoter, which has two characterised AP-1 sites. Using this reporter gene transfection system, the role of the AP-1 sites in mediating valproate's effects on gene expression was further examined by eliminating the AP-1 sites by mutagenesis. Lithium increased the expression of the luciferase reporter gene driven by an SV40 promoter/enhancer containing TREs (Yuan *et al*, 1998; Chen *et al*, 1999*a*); this increase was time- and concentration-dependent. Furthermore, mutations in the TRE sites of the reporter gene promoter markedly attenuated these effects. These data indicate that lithium may stimulate gene expression (at least in part) through the AP-1 transcription factor pathway, effects that may play an important part in its long-term clinical actions (Fig. 4).

To ascribe therapeutic relevance to the observed biochemical findings it is necessary to demonstrate that they do, in fact, also occur in critical regions of the central nervous system *in vivo*. It is well established that the expression of tyrosine hydroxylase (TH) is largely mediated by the AP-1 family of transcription factors (Kumer & Vrana, 1996). The effects of acute and chronic lithium on the levels of TH in three brain areas that have been implicated in the pathophysiology of mood disorders – the frontal cortex, hippocampus and striatum – were therefore examined (Goodwin & Jamison, 1990; Drevets *et al*, 1992, 1997; Ketter *et al*, 1997; Soares & Mann, 1997). It was found that chronic lithium treatment significantly increased the levels of TH in all three brain areas (Chen *et al*, 1998). Future *in situ* hybridisation studies or immunohistochemistry studies are needed to determine if lithium also increases the expression of TH in areas of brain known to contain the cell bodies of the major noradrenergic and dopaminergic systems, namely the locus caeruleus, ventral tegmental area and substantia nigra. The results clearly show that in addition to increasing AP-1 DNA binding activity and

https://doi.org/10.1192/bjp.178.41.s107 Published online by Cambridge University Press

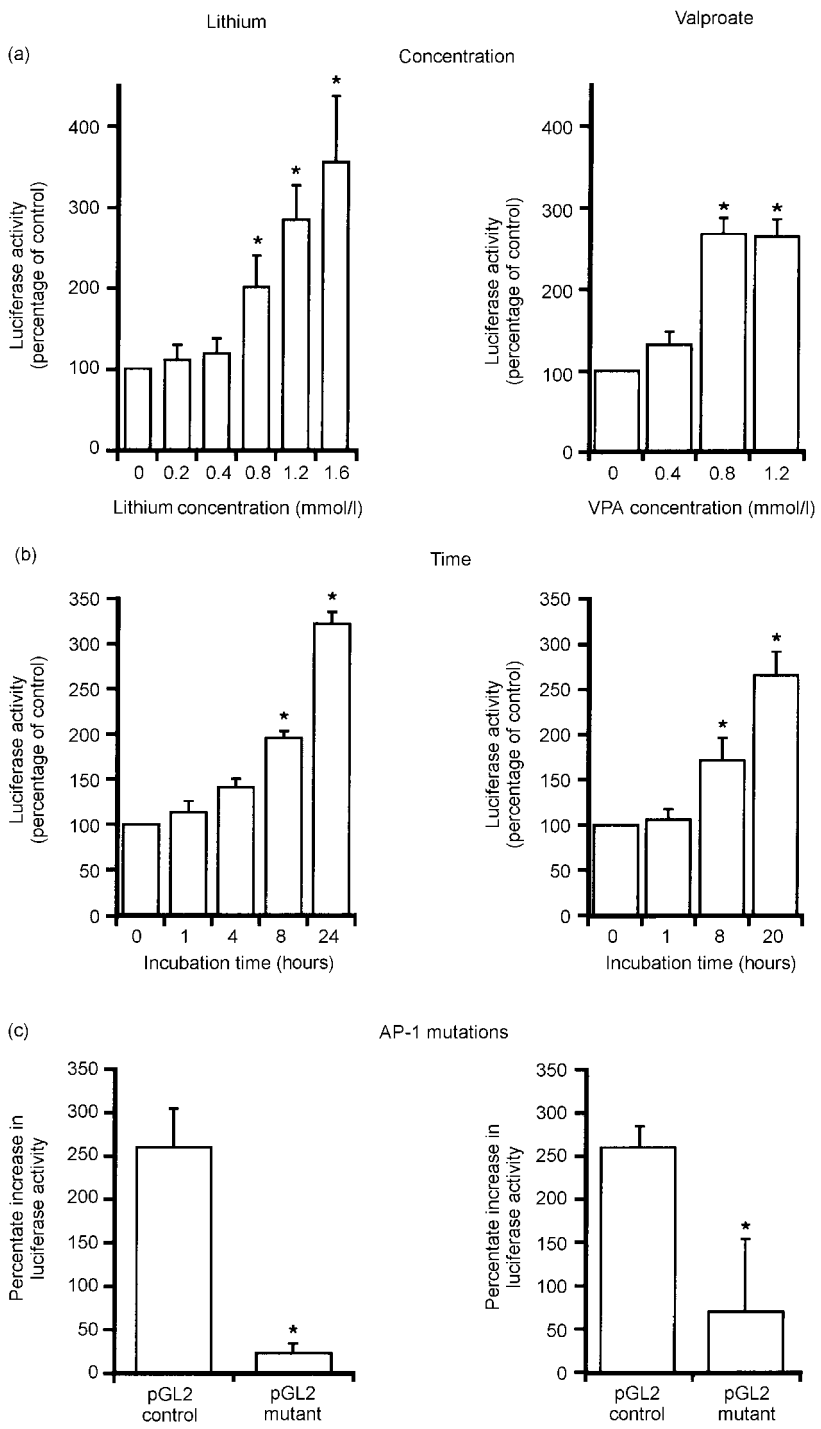

Fig. 4 Effects of lithium and valproate (VPA) on luciferase reporter gene activity in cultured cells: (a) time and (b) dose dependency. Cells were cultured, transfected with the pGL2 control vector and then incubated with lithium or valproate at the concentrations indicated in (a) for 24 hours, or with lithium (1.0 mol/l) or VPA (1.0 mol/l) for the times indicated in (b) as described in Yuan *et al* (1998) and Chen *et al* (1999*a*). Luciferase activity was assayed in the whole cell lysates using the Promega kit. Data are means (s.e.). $^*P<0.05$ compared to control. (c) Attenuation of the lithium- or valproate-induced increases in luciferase activity by TRE mutations. The mutations on the TRE sites were made using the QuikChange site directed mutagenesis kit. Cells were transfected with either pGL2 control or mutant pGL2 control and then incubated with 1.0 mmol/l lithium or 0.6 mmol/l valproate for 24 hours. Luciferase activity was assayed using the Promega kit. The values in the bar graphs are the means (s.e.) of three or more experiments. Reproduced from Yuan *et al* (1998) and Chen *et al* (1999*c*) with permission.

the expression of the luciferase reporter gene *in vitro*, chronic lithium administration increases the TH levels in areas of rat brain *ex vivo*. These effects are compatible with an effect on the DNA binding of TRE to the AP-1 family of transcription factors, and have the potential to regulate patterns of gene expression in critical neuronal circuits (Boyle *et al*, 1991; Lin *et al*, 1993). In view of the key roles of these nuclear transcription regulatory factors in long-term neuronal plasticity and cellular responsiveness, and the potential to regulate patterns of gene expression in critical neuronal circuits (Boyle *et al*, 1991; Lin *et al*, 1993), these effects may be important in the therapeutic efficacy of lithium and valproate, and are worthy of further study. The precise mechanisms by which lithium regulates AP-1 DNA binding activity still need to be fully delineated, but may involve effects on PKC isozymes (Yuan *et al*, 1999). Furthermore, as we discuss in greater detail below, lithium, at clinically relevant concentrations, has been demonstrated to inhibit the activity of glycogen synthase kinase-3β (GSK-3β) (Hedgepeth *et al*, 1997; Klein & Melton, 1996; Stambolic *et al*, 1996). This enzyme is known to phosphorylate c-*jun* at three sites adjacent to the DNA binding domain, thereby reducing TRE binding (Lin *et al*, 1993; Stambolic *et al*, 1996).

GLYCOGEN SYNTHASE KINASE

Is GSK-3β a therapeutically relevant target for mood-stabilising agents?

In the late 1990s a completely unexpected target for the action of lithium was identified. Klein & Melton (1996) were the first to demonstrate that lithium, at therapeutically relevant concentrations, is an inhibitor of GSK-3β. This is an evolutionarily highly conserved kinase, originally identified as a regulator of glycogen synthesis, and is now known to have an important role in the central nervous system, by regulating various cytoskeletal processes through its effects on tau and synapsin I, as well as long-term nuclear events by phosphorylation of c-*jun*, and nuclear translocation of β-catenin (Klein & Melton, 1996; Wagner *et al*, 1996; Yost *et al*, 1996; Ikeda *et al*, 1997; Lucas & Salinas, 1997). However, lithium is known to bring about a variety of biochemical effects (Bunney &

https://doi.org/10.1192/bjp.178.41.s107 Published online by Cambridge University Press

Garland-Bunney, 1987; Mork *et al*, 1992; Chang *et al*, 1996; Jope, 1999) (see Table 2), and it is unclear if inhibition of GSK-3β is therapeutically relevant. A series of studies were therefore undertaken to determine if valproate, like lithium, also regulates GSK-3; it was found that valproate inhibits both GSK-3α and GSK-3β in a concentration-dependent manner, with significant effects observed at concentrations similar to those attained clinically (Chen *et al*, 1999*b*) (Fig. 5).

Incubation of intact human neuroblastoma SH-SY5Y cells with valproate resulted in an increase in the subsequent *in vitro* recombinant GSK-3β-mediated ^{32}P incorporation into two putative GSK-3 substrates (approximate molecular weights 85 and 200), compatible with inhibition of endogenous GSK-3β by valproate. Consistent with GSK-3β inhibition, incubation of SH-SY5Y cells with valproate results in a significant time-dependent increase in both cytosolic and nuclear β-catenin levels. Since GSK-3β plays a critical role in the central nervous system by regulating various cytoskeletal processes as well as long-term nuclear events, and is a common target for both lithium and valproate, its inhibition may underlie some of the long-term therapeutic effects of mood-stabilising agents, and represents an exciting area of future research.

Table 2 Biochemical mediators of lithium's effects in the central nervous system: a surfeit of candidates

Na^+/K^+ ATPase
Neurotransmitters
Serotonin
Dopamine
Noradrenalin
Acetylcholine
Glutamate
Receptors
β, α_2, D_2, 5-HT_{1A}
Signalling
Phosphoinositides
PKC, MARCKS
G proteins
Phospholipase A_2
Adenylate cyclases
Calcium
GSK-3β
Gene expression

ATPase, adenosine 5′-triphosphatase; PKC, protein kinase C; MARCKS, myristoylated alanine-rich C kinase substrate; GSK, glycogen synthase kinase.

MESSENGER RNA DIFFERENTIAL DISPLAY STUDIES

Regulation of long-term changes in gene expression by mood-stabilising agents

Although several specific genes that are the targets of long-term lithium and/or valproate have been identified, it has been estimated that approximately 10 000–15 000 genes may be expressed in a given cell at any time, and thus new methods are required to study the complex pattern of gene expression changes induced by chronic drug treatment (Hyman & Nestler, 1996; Jope, 1999; Manji *et al*, 1999, 2000*b*). New methodologies have evolved to identify the differential expression of multiple genes (e.g. in pathological *v*. normal tissue, or in control *v*. treated tissue). The pool of transcribed mRNAs in a given cell is termed a 'transcriptome', and underlies the cell phenotype. The transcriptome, which includes the transcribed genes and the corresponding number of mRNA copies, changes under both physiological and pathological conditions, as well as in response to treatments. Identifying the genes whose transcription is altered in the transition from one functional state to another is central to defining the precise molecular events that regulate cell phenotype and function. A series of studies utilising the technique of mRNA differential display, based on reverse transcription and the polymerase chain reaction, to identify changes in gene expression associated with the therapeutic efficacy of mood stabilisers, investigated the effects of lithium and valproate (the only two medications approved by the US Food and Drug Administration for the treatment of bipolar disorder). Although these two agents are unlikely to exert their therapeutic effects by precisely the same mechanisms, identifying the genes that are regulated in concert by these structurally highly dissimilar agents may provide important clues to the molecular mechanisms underlying mood stabilisation (Ikonomov & Manji, 1999). Inbred male Wistar Kyoto rats (selected to reduce potential false positives due to individual differences) were treated chronically with lithium, valproate or saline. Ribonucleic acid was extracted from the frontal cortices to study gene expression using mRNA differential display (Liang & Pardee, 1992; Liang *et al*, 1995). One hundred and fifty reactions were performed with the combination of three one-base anchored 3′ primers and fifty 5′ arbitrary primers (Liang & Pardee, 1992; Liang *et al*, 1995); on average, 270 bands were obtained in each reaction. Clones were sequenced from T7 and M13 priming sites using an automated sequencer; BLAST searches were conducted for each clone obtained, and the homology with known sequences in the GenBank database was further evaluated using the BESTFIT program from the Genetic Computer Group's sequence analysis software package. To date, we have identified a number of mRNA species whose expression is markedly increased or decreased by both treatments.

One of the genes whose expression is markedly increased by both lithium and valproate (clone 12; GenBank accession number AF087437) is 355 base pairs long, contains a poly(A)tail, and shows high sequence homology with the 3′ end of the β subunit of the mouse (92% identical sequences) and human (85%) transcription factor, polyomavirus enhancer binding protein 2 (PEBP2)β, also known as core-binding factor (CBF) β and acute myelogenous leukaemia 1 (AML1) β (Liu *et al*, 1993; Wang *et al*, 1996; Kanno *et al*, 1998). In the absence of available antibodies to PEBP2-β, we next sought to determine if the treatments induced functional changes in PEBP2 transcription factor activity. Treatment with both lithium and valproate increased the DNA binding activity of PEBP2-αβ in the frontal cortex (Chen *et al*, 1999*c*). To determine if these effects are specific for mood stabilisers, we investigated the effects of chronic D-amphetamine sulphate and chlordiazepoxide; neither of these treatments produced any detectable changes in PEBP2-αβ DNA binding activity. We therefore investigated putative targets of the PEBP2 transcription factor, which may be of therapeutic relevance in the treatment of bipolar disorder.

The promoter of the B-cell lymphoma protein 2 (bcl-2) gene (both rat and human genes) has a PEBP2 binding site, and this site has been clearly demonstrated to increase the expression of a reporter gene driven by the bcl-2 promoter (Klampfer *et al*, 1996). A neuroprotective role for bcl-2 is well established, and constitutive expression of high levels of bcl-2 protein enhances the survival of cells when exposed to

https://doi.org/10.1192/bjp.178.41.s107 Published online by Cambridge University Press

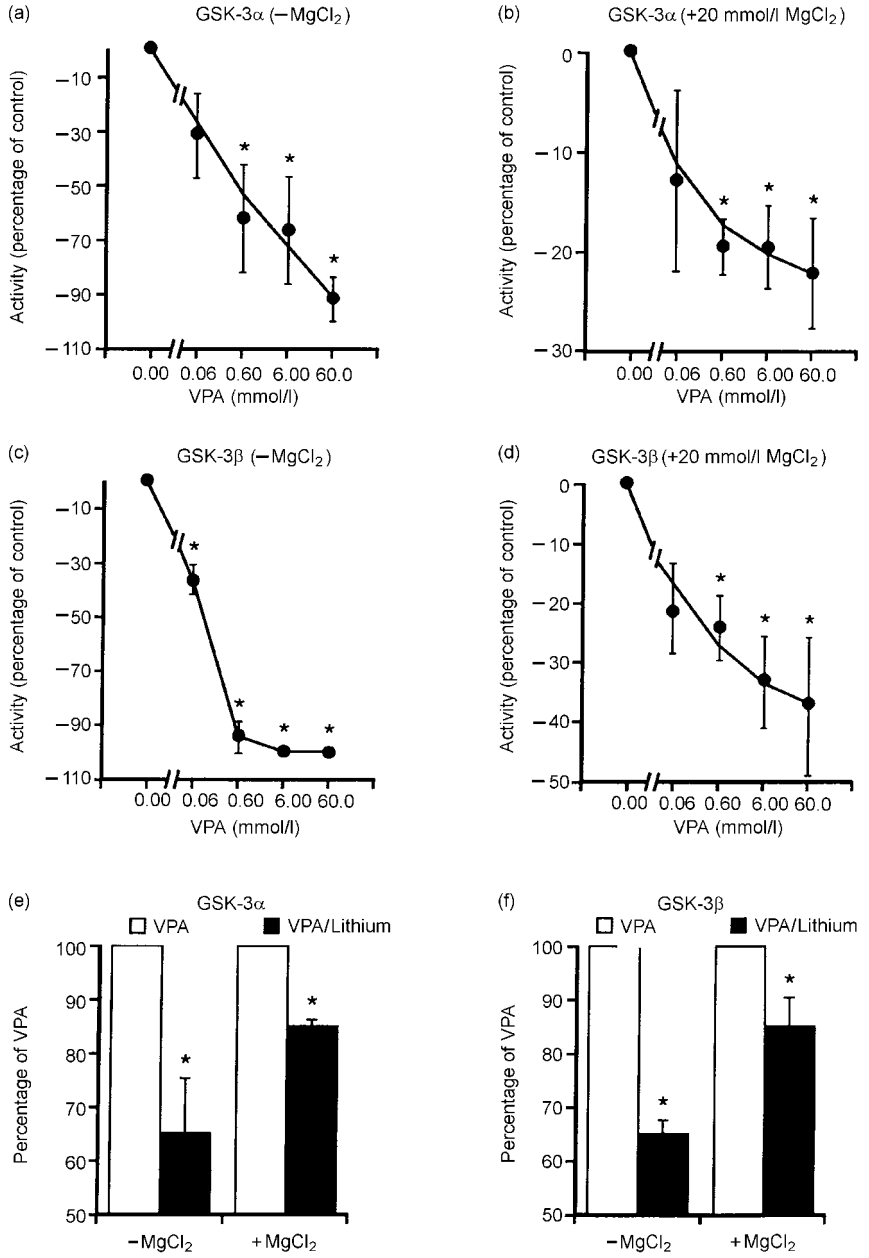

Fig. 5 Effects of valproate (VPA) on glycogen synthase kinase 3 (GSK-3). (a, b) Effects of VPA on GSK-3α activity. The reaction was carried out using purified or recombinant GSK-3, and 150 μmol/l MgATP (as described in Chen *et al*, 1999*b*) with VPA, either in the absence (a) or presence (b) of additional Mg^{2+} (20 mmol/l). Data are means (s.e.) from three experiments. (c, d) Effects of VPA on GSK-3β activity (as described in Chen *et al*, 1999*b*) in the absence (c) or presence (d) of additional Mg^{2+} (20 mmol/l). Data are means (s.e.) from three experiments. VPA inhibited GSK-3α and GSK-3β in a concentration-dependent manner, both in the absence and presence of Mg^{2+}; $*P<0.05$ compared to control (e, f). Additivity of the effects of VPA and lithium on GSK-3 activity. The reaction was carried out at room temperature for 20 minutes utilising 0.5 U GSK-3α or GSK-3β, with either VPA alone (0.6 mmol/l), or VPA (0.6 mmol/l) plus lithium (1.0 mmol/l). Data are means (s.e.) from three experiments. The addition of lithium resulted in further significant reductions in the activity of both GSK-3α and GSK-3β; $*P<0.05$ compared to VPA alone. Figure modified, and reproduced, with permission from Chen *et al* (1999*b*).

adverse stimuli (Jacobson & Raff, 1995; Merry & Korsmeyer, 1997). Additionally, the delivery *in vivo* of a bcl-2 expression vector protects neurons against focal ischaemia (Lawrence *et al*, 1996), and bcl-2 has also been demonstrated to promote neuronal regeneration (Chen *et al*, 1997). In this context, it is noteworthy that mood disorders, including bipolar disorder, are associated with volumetric changes on magnetic resonance imaging and computed tomography, suggestive of neuronal atrophy or loss (Elkis *et al*, 1995; Drevets *et al*, 1997; Ketter *et al*, 1997). Furthermore, both brain imaging studies and post-mortem morphometric three-dimensional cell counting studies have implicated the frontal cortex as a site of neuronal atrophy or loss in bipolar disorder (Dreets *et al*, 1997; Rajkowska *et al*, 1999; Rajkowska, 2000). We therefore investigated whether the treatment-induced increase in PEBP2-αβ DNA binding activity in the frontal cortex was accompanied by changes in the levels of the neuroprotective protein, bcl-2. Chronic treatment of rats with both lithium and valproate resulted in a doubling of bcl-2 levels in the frontal cortex, effects that were accompanied by a marked increase in the number of bcl-2 immunoreactive cells in layers 2 and 3 of the frontal cortex. It is noteworthy that neuroprotective effects have recently been reported for both lithium and valproate (Bruno *et al*, 1995; Nonaka *et al*, 1998); the robust increases in the levels of bcl-2 that we have demonstrated may have a major role in mediating these effects, and suggest that mood-stabilising agents may bring about some of their long-term beneficial effects via hitherto underappreciated neuroprotective effects (Smith *et al*, 1995; Duman *et al*, 1997; Manji *et al*, 1999).

CONCLUSION

Regulation of signal transduction and gene expression within critical regions of the brain affects the intracellular signal generated by a number of neurotransmitter systems; these effects thus represent attractive putative mediators of the therapeutic actions of mood stabilisers, effects that are probably mediated via their effects on a network of interconnected neurotransmitter pathways (Fig. 6). It is becoming increasingly clear that for many refractory patients with these disorders, new drugs simply mimicking the 'traditional' drugs that directly or indirectly alter neurotransmitter levels or bind to cell surface receptors may be of limited benefit. This is because such strategies implicitly assume that the target receptors are functionally intact, and that altered synaptic activity will thus be transduced to modify the post-synaptic 'throughput' of the system. However, the possible existence of abnormalities

https://doi.org/10.1192/bjp.178.41.s107 Published online by Cambridge University Press

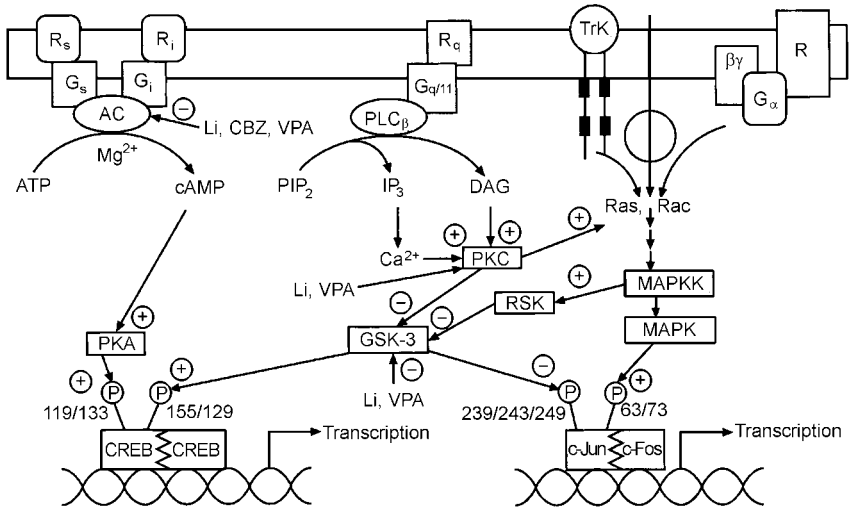

Fig. 6 Effects of mood stabilisers on signalling pathways and gene expression. Abbreviations as follows: receptors coupled to stimulation (R_r) or inhibition (R_i) of adenylate cyclase (AC); G proteins mediating stimulation (G_s) or inhibition (G_i) of adenylate cyclase; receptors (R_q) coupled to the G protein, $G_{q/11}$; phospholipase C β isozyme (PLCβ); receptor tyrosine kinase (TrK); phosphatidylinositol 4,5-bisphosphate (PIP_2); diacylglycerol, DAG; inositol 1,4,5-trisphosphate (IP_3); protein kinase C (PKC); mitogen activated protein kinase (MAPK); mitogen activated protein kinase kinase (MAPKK); glycogen synthase kinase 3 (GSK-3); cyclic AMP response element binding protein (CREB); lithium (Li); carbamazepine (CBZ); valproate (VPA).

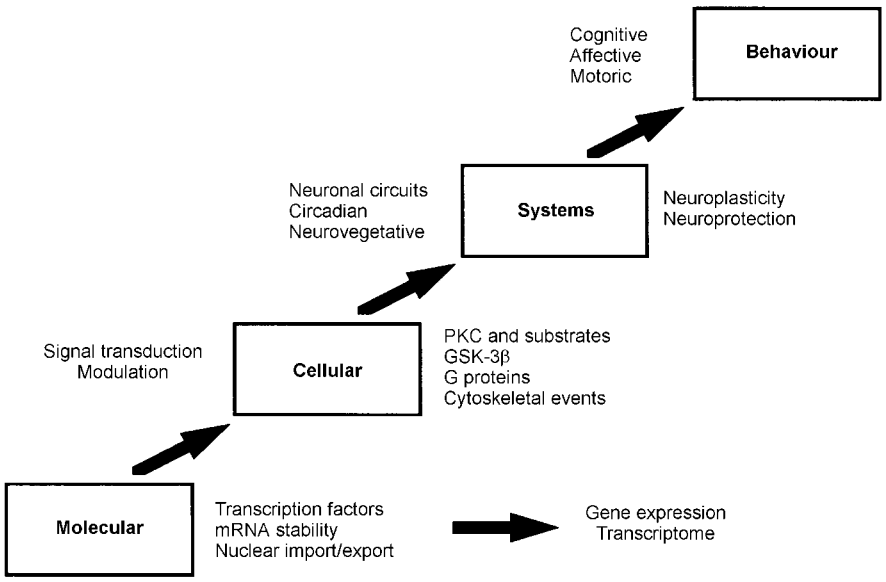

Fig. 7 Four principal levels of lithium effects. Lithium exerts its primary biochemical effects at the molecular and cellular levels. These effects bring about changes in critical interacting neuronal circuits, thereby regulating affective, cognitive and motor systems, effects that are ultimately responsible for bringing about long-term stabilisation of mood. GSK-3β, glycogen synthase kinase 3β; mRNA, messenger RNA; PKC, protein kinase C.

in signal transduction pathways suggests that for patients refractory to conventional medications, benefit may only be obtained by the direct targeting of post-receptor sites (Nestler, 1998; Manji *et al*, 2000*a*, 2001). Recent discoveries concerning a variety of mechanisms involved in the formation and inactivation of second messengers offer the promise for the development of novel pharmacological agents designed to 'site-specifically' target signal transduction pathways. Although clearly more complex than the development of receptor-specific drugs, it may be possible to design novel agents to selectively affect second-messenger systems because they are heterogeneous at the molecular and cellular level, are linked to receptors in a variety of ways, and are expressed in different stoichiometries in different cell types. Additionally, since signal transduction pathways display certain unique characteristics depending on their activity state, e.g. rate of guanine nucleotide exchange, G protein conformational states, GTP hydrolysis, interaction with different regulators of G protein signalling (RGS) proteins, cytosol to membrane translocation of PKC isozymes and receptor kinases, they offer built-in targets for relative specificity of action, depending on the 'set point' of the substrate. It is our strong conviction that it is at the cellular and molecular level that some of the most exciting advances in our understanding of the long-term therapeutic action of lithium will take place in the coming years (Manji & Lenox, 1999, 2000). Current studies of long-term lithium-induced changes to the PKC signalling pathway (including PKC isozyme regulation, post-translational modification of important phosphoproteins, and PKC-mediated gene expression) are a most promising avenue for future investigation. An exciting recent finding is the hitherto completely unexpected demonstration that lithium robustly increases the levels of the major neuroprotective protein bcl-2 (Manji *et al*, 1999). This upregulation of bcl-2 is accompanied by neurotrophic effects of lithium in both preclinical and clinical studies (Manji *et al*, 2000*b*; Moore *et al*, 2000*a*,*b*). In view of the recent brain imaging studies and post-mortem morphometric three-dimensional cell counting studies demonstrating neuronal atrophy or loss in bipolar disorder (Rajkowska *et al*, 1999), these results raise the intriguing possibility that mood-stabilising agents may bring about some of their long-term beneficial effects by their underappreciated neuroprotective action (Duman *et al*, 1997, 2000; Manji *et al*, 1999, 2000*b*) (Fig. 7). These recent observations also suggest that impairments of neuroplasticity and cellular resilience may contribute to the pathophysiology of mood disorders, and the poor long-term outcome observed in many patients (Manji *et al*, 2000*b*). Strategies are being investigated to develop small molecule switches for protein–protein interactions, which have the potential to regulate the activity of growth factors, MAP kinase cascades and interactions between homodimers and heterodimers of the bcl-2 family of proteins

https://doi.org/10.1192/bjp.178.41.s107 Published online by Cambridge University Press

(Guo *et al*, 2000); the development of treatments that directly target molecules involved in critical neuronal survival and cell death pathways would have the potential to enhance neuroplasticity and cellular resilience, and thereby modulate the long-term course and trajectory of these devastating illnesses.

ACKNOWLEDGEMENTS

The authors' research is supported in part by the National Institute of Mental Health, the Theodore and Vada Stanley Foundation, National Association for Research on Schizophrenia and Depression and the Joseph Young Senior Foundation. The authors would also like to acknowledge the valuable contributions of Joseph M. Bebchuk, MD; Debra Glitz, MD; the nursing staff of the Neuropsychiatric Research Unit; and Ms Celia Knobelsdorf for providing outstanding editorial assistance.

REFERENCES

Aitman, T. J. & Todd, J. A. (1995) Molecular genetics of diabetes mellitus. *Baillière's Clinical Endocrinology and Metabolism*, **9**, 631–656.

Allison, J. H. & Stewart, M. A. (1971) Reduced brain inositol in lithium treated rats. *Nature (New Biology)*, **233**, 267–268.

Baldessarini, R. J. & Tondo, L. (2000) Does lithium treatment still work? Evidence of stable responses over three decades. *Archives of General Psychiatry*, **57**, 187–190.

__, __ & Hennen, J. (1997) Effects of lithium treatment and its discontinuation in Bipolar Manic–Depressive Disorders. *Journal of Clinical Psychiatry*, **60** (suppl. 2), 77–84.

Baraban, J. M., Worley, P. F. & Synder, S. H. (1989) Second messenger systems and psychoactive drug action; focus on the phosphoinositide system and lithium. *American Journal of Psychiatry*, **146**, 1251–1260.

Barondes, S. H. (1998) *Mood Genes: Hunting for Origins of Mania and Depression*? New York, NY: Freeman.

Bebchuk, J. M., Arfken, C. L., Dolan-Manji, S., *et al* (2000) A preliminary investigation of a protein kinase C inhibitor (tamoxifen) in the treatment of acute mania. *Archives of General Psychiatry*, **57**, 95–97.

Berrettini, W., Ferraro, T., Choi, H., *et al* (1997) Linkage studies of bipolar illness. *Archives of General Psychiatry*, **54**, 32–39.

Berridge, M. J. & Irvine, R. F. (1989) Inositol phosphates and cell signalling. *Nature*, **341**, 197–205.

__, Downes, C. P. & Hanley, M. R. (1982) Lithium amplifies agonist-dependent phosphatidylinositol responses in brain and salivary glands. *Biochemical Journal*, **206**, 587–595.

__, __ & __ (1989) Neural and developmental actions of lithium: a unifying hypothesis. *Cell*, **59**, 411–419.

Bhalla, U. S. & Iyengar, R. (1999) Emergent properties of networks of biological signaling pathways. *Science*, **283**, 381–387.

Blackwood, D. H. R., He, L., Morris, S. W., *et al* (1996) A locus for bipolar affective disorder on chromosome 4p. *Nature Genetics*, **12**, 427–430.

Bourne, H. R. & Nicoll, R. (1993) Molecular machines integrate coincident synaptic signals. *Cell*, **72**, 65–75.

Boyle, W. J., Smeal, T., Defize, L. H., *et al* (1991) Activation of protein kinase C decreases phosphorylation of c-Jun at sites that negatively regulate its DNA-binding activity. *Cell*, **64**, 573–784.

Bruno, V., Sortino, M. A., Scapagnini, U., *et al* (1995) Antidegenerative effects of Mg(2+)valproate in cultured cerebellar neurons. *Functional Neurology*, **10**, 121–130.

Bunney, W. E. & Garland-Bunney, B. L. (1987) Mechanisms of action of lithium in affective illness: basic and clinical implications. In *Psychopharmacology: The Third Generation of Progress* (ed. H. Y. Meltzer), pp. 553–565. New York: Raven Press.

Catherino, W. H. & Jordan, V. C. (1993) A risk–benefit assessment of tamoxifen therapy. *Drug Safety*, **8**, 381–397.

Catt, K. J. & Balla, T. (1989) Phosphoinositide metabolism and hormone action. *Annual Review of Medicine*, **40**, 487–509.

Chang, M. C., Grange, E., Rabin, O., *et al* (1996) Lithium decreases turnover of arachidonate in several brain phospholipids. *Neuroscience Letters*, **22**, 171–174.

Chen, G., Manji, H. K., Hawver, D. B., *et al* (1994) Chronic sodium valproate selectively decreases protein kinase C α and ε *in vitro*. *Journal of Neurochemistry*, **63**, 2361–2364.

__, Yuan, P. X., Hawver, D. B., *et al* (1997) Increase in AP-1 transcription factor DNA binding activity by valproic acid. *Neuropsychopharmacology*, **16**, 238–245.

__, __, Jiang, Y., *et al* (1998) Lithium increases tyrosine hydroxylase levels both *in vivo* and *in vitro*. *Journal of Neurochemistry*, **70**, 1768–1771.

__, __, __, *et al* (1999*a*) Valproate robustly enhances AP-1 mediated gene expression. *Molecular Brain Research*, **64**, 52–58.

__, Huang, L. D., Jiang, Y., *et al* (1999*b*) The mood stabilising agent valproate inhibits the activity of glycogen synthase kinase 3. *Journal of Neurochemistry*, **72**, 1327–1330.

__, Zeng, W. Z., Jiang, L., *et al* (1999*c*) The mood stabilising agents lithium and valproate robustly increase the expression of the neuroprotective protein bcl-2 in the CNS. *Journal of Neurochemistry*, **72**, 879–882.

Chuang, D. M. (1989) Neurotransmitter receptors and phosphoinositide turnover. *Annual Review of Pharmacology and Toxicology*, **29**, 71–110.

Conn, P. J. & Sweatt, J. D. (1994) Protein kinase C in the nervous system. In *Protein Kinase* (ed. J. F. Kuo), pp. 199–235. New York: Oxford University Press.

Couldwell, W. T., Weiss, M. H., DeGiorgio, C. M., *et al* (1993) Clinical and radiographic response in patients with recurrent malignant gliomas treated with high-dose tamoxifen. *Neurosurgery*, **32**, 485–498.

Davies, J. L., Kawaguchi, Y., Bennett, S. T., *et al* (1994) A genome-wide search for human type I diabetes susceptibility genes. *Nature*, **371**, 130–136.

Davis, J. M., Janicak, P. G., Hogan, D. M. (1999) Mood stabilizers in the prevention of recurrent affective disorders: a meta-analysis. *Acta Psychiatrica Scandinavica*, **100**, 406–447.

de Beer, R., van den Boogaart, A., van Ormondt, D., *et al* (1992) Application of tome-domain fitting in the quantification of in vivo IH spectroscopic imaging data sets. *NMR in Biomedicine*, **5**, 171–178.

Drevets, W. C., Videen, T. O., Price, J. I., *et al* (1992) A functional anatomical study of unipolar depression. *Journal of Neuroscience*, **12**, 3628–3641.

__, Price, J. L., Simpson, J. R., *et al* (1997) Subgenual prefrontal cortex abnormalities in mood disorders. *Nature*, **386**, 824–827.

Duman, R. S., Heninger, G. R. & Nestler, E. J. (1997) A molecular and cellular theory of depression. *Archives of General Psychiatry*, **54**, 597–606.

__, Malberg, K., Nakagawa, S., *et al* (2000) Neuronal plasticity and survival in mood disorders. *Biological Psychiatry*, **48**, 732–739.

Elkis, H., Friedman, W. A. & Meltzer, H. Y. (1995) Meta-analyses of studies of ventricular enlargement and cortical suicidal prominence in mood disorders. Comparisons with controls of patients with schizophrenia. *Archives of General Psychiatry*, **51**, 735–746.

Fisher, S. K., Heacock, A. M. & Agrenoff, B. W. (1992) Inositol lipids and signal transduction in the nervous system: an update. *Journal of Neurochemistry*, **58**, 18–38.

Flint, J. & Corley, R. (1996) Do animal models have a place in the genetic analysis of quantitative human behavioral traits? *Journal of Molecular Medicine*, **74**, 515–521.

Frahm, J., Merboldt, K. D. & Hanicke, W. (1987) Localised proton spectroscopy using stimulated echoes. *Journal of Magnetic Resonance*, **72**, 502–508.

Freeman, M. P. & Stoll, A. L. (1998) Mood stabilizer combinations: a review of safety and efficacy. *American Journal of Psychiatry*, **155**, 12–21.

Freimer, N. B., Reus, V. I., Escamilla, M. A., *et al* (1996) Genetic mapping using haplotype, association and linkage methods suggests a locus for severe bipolar disorder (BPI) at 18q22-q23. *Nature Genetics*, **12**, 436–441.

Friedman, E., Hoau, Y. W., Levinson, D., *et al* (1993) Altered platelet protein kinase C activity in bipolar affective disorder, manic episode. *Biological Psychiatry*, **33**, 520–525.

Gelernter, J. (1995) Genetics of bipolar affective disorder: time for another reinvention? *American Journal of Human Genetics*, **56**, 1262–1266.

Ginns, E. I., Ott, J., Egeland, J. A., *et al* (1996) A genome-wide search for chromosomal loci linked to bipolar affective disorder in the Old Order Amish. *Nature Genetics*, **12**, 431–435.

__, St Jean, P., Philibert, R. A., *et al* (1998) A genome-wide search for chromosomal loci linked to mental health wellness in relatives at high risk for bipolar affective disorder among the Old Order Amish. *Proceedings of the National Academy of Science USA*, **95**, 15531–15536.

Godfrey, P. P., McClue, S. J., White, A. M., *et al* (1989) Potentiation by lithium of CMP-phosphatidate formation in carbachol-stimulated rat cerebral-cortical slices and its reversal by myo-inositol. *Biochemical Journal*, **258**, 621–624.

Goodwin, F. & Jamison, K. R. (1990) *Manic–depressive Illness*. New York: Oxford University Press.

Guo, Z., Zhou, D. & Schultz, P. G. (2000) Designing small-molecule switches for protein–protein interactions. *Science*, **288**, 2042–2045.

Gurling, H., Smyth, C., Kalsi, G., *et al* (1995) Linkage findings in bipolar disorder. *Nature Genetics*, **10**, 8–9.

Hahn, C. G. & Friedman, E. (1999) Abnormalities in protein kinase C signaling and the pathophysiology of bipolar disorders. *Bipolar Disorders*, **1**, 81–86.

Hallcher, L. M. & Sherman, W. R. (1980) The effects of lithium ion and other agents on the activity of myo-inositol-1-phosphatase from bovine brain. *Journal of Biological Chemistry*, **225**, 10896–10901.

https://doi.org/10.1192/bjp.178.41.s107 Published online by Cambridge University Press

Hedgepath, C. M., Conrad, L. J., Zhang, J., *et al* (1997) Activation of the Wnt signaling pathway: a molecular mechanism for lithium action. *Developmental Biology*, **185**, 82–91.

Huang, K. P. (1989) The mechanism of protein kinase C activation. *Trends in Neurosciences*, **12**, 425–432.

Hughes, P. & Dragunow, M. (1995) Induction of immediate-early genes and the control of neurotransmitter-regulated gene expression within the nervous system. *Pharmacological Reviews*, **47**, 133–178.

Hyman, S. E. & Nestler, E. J. (1996) Initiation and adaptation: a paradigm for understanding psychotropic drug action. *American Journal of Psychiatry*, **153**, 151–162.

Ikeda, S., Kishida, S., Yamamoto, H., *et al* (1997) Axin, a negative regulator of the Wnt signalling pathway, forms a complex with GSK-3β and β-catenin and promotes GSK-3β-dependent phosphorylation of β-catenin. *EMBO Journal*, **17**, 1371–1384.

Ikonomov, O. & Manji, H. K. (1999) Molecular mechanisms underlying mood-stabilization in manic–depressive illness: the phenotypic challenge. *American Journal of Psychiatry*, **156**, 1506–1514.

Jacobson, M. D. & Raff, M. (1995) Programmed cell death and Bcl-2 protection in very low oxygen. *Nature*, **374**, 814–816.

Jope, R. S. (1999) Anti-bipolar therapy: mechanism of action of lithium. *Molecular Psychiatry*, **4**, 117–128.

__ & Song, L. (1997) AP–1 and NF-κB stimulated by carbachol in human neuroblastoma SH-SY5Y cells are differentially sensitive to inhibition by lithium. *Molecular Brain Research*, **50**, 171–180.

__ & Williams, M. B. (1994) Lithium and brain signal transduction systems. *Biochemical Pharmacology*, **77**, 429–441.

Jordan, V. C. (1994) A current view of tamoxifen for the treatment of breast cancer. *British Journal of Pharmacology*, **110**, 507–517.

Kanno, T., Kanno, Y., Chem, L. F., *et al* (1998) Intrinsic transcriptional activation–inhibition domains of the polyomavirus enhancer binding protein 2/core binding factor alpha subunit revealed in the presence of the beta subunit. *Molecular and Cellular Biology*, **18**, 2444–2454.

Karin, M. & Smeal, T. (1992) Control of transcription factors by signal transduction pathways: the beginning of the end. *Trends in Biochemical Sciences*, **17**, 418–422.

Ketter, T. A., George, M. S., Kimbrell, T. A., *et al* (1997) Neuroanatomical models and brain imaging studies. In *Bipolar Disorder: Biological Models and Their Clinical Application* (eds R. T. Joffe & L. T. Young), pp. 179–217. New York: Marcel Dekker.

Klampfer, L., Zhang, J., Zelenetz, A. O., *et al* (1996) The AML1/ETO fusion protein activates transcription of Bcl-2. *Proceedings of the National Academy of Science USA*, **26**, 14059–14064.

Klein, P. S. & Melton, D. A. (1996) A molecular mechanism for the effect of lithium on development. *Proceedings of the National Academy of Science USA*, **93**, 8455–8459.

Kofman, O. & Belmaker, R. H. (1990) Intracerebroventricular myo-inositol antagonizes lithium-induced suppression of rearing behaviour in rats. *Brain Research*, **534**, 345–347.

__ & __ (1993) Biochemical, behavioral and clinical studies of the role of inositol in lithium treatment and depression. *Biological Psychiatry*, **34**, 839–852.

Kumer, S. C. & Vrana, K. E. (1996) Intricate regulation of tyrosine hydroxylase activity and gene expression. *Journal of Neurochemistry*, **67**, 443–461.

Lawrence, M. S., Ho, D. Y., Sun, G. H., *et al* (1996) Overexpression of Bcl-2 with herpes simplex virus vectors protects CNS neurons against neurological insults in vitro and in vivo. *Journal of Neuroscience*, **16**, 468–496.

Lenox, R. H., Watson, D. G. J. P. & Ellis, J. (1992) Chronic lithium administration alters a prominent PKC substrate in rat hippocampus. *Brain Research*, **570**, 333–340.

Li, P. P., Andreopoulos, S. & Warsh, J. J. (2000) Signal transduction abnormalities in bipolar affective disorder. In *Cerebral Signal Transduction* (ed. M. E. A. Reith), pp. 283–312. Totowa, NJ: Humana Press.

Liang, P. & Pardee, A. B. (1992) Differential display of eukaryotic messenger RNA by means of the polymerase chain reaction. *Science*, **257**, 967–971.

__, Bauer, D., Averboukh, L., *et al* (1995) Analysis of altered gene expression by differential display. *Methods in Enzymology*, **254**, 304–321.

Lin, A., Smeal, T., Binetury, B., *et al* (1993) Control of AP-1 activity by signal transduction cascades. *Advances in Second Messenger and Phosphoprotein Research*, **28**, 225–260.

Liu, P., Tarle, S. A., Hajra, A., *et al* (1993) Fusion between transcription factor CBF beta/PEBP2 beta and a myosin heavy chain in acute myeloid leukemia. *Science*, **261**, 1041–1044.

Lucas, F. R. & Salinas, P. C. (1997) WNT-7A induces axonal remodelling and increases synapsin I levels in cerebellar neurons. *Developmental Biology*, **192**, 31–44.

Manji, H. K. (1992) G proteins: implications for psychiatry. *American Journal of Psychiatry*, **149**, 746–760.

__ & Potter, W. Z. (1997) Monoaminergic mechanisms. In *Bipolar Disorder: Biological Models and Their Clinical Application* (eds R. T. Joffe & L. T. Young), pp. 1–40. New York: Marcel Dekker.

__ & Lenox, R. H. (1999) Protein kinase C signaling in the brain: molecular transduction of mood stabilization in the treatment of manic–depressive illness. *Biological Psychiatry*, **46**, 1328–1351.

__ & __ (2000) Signaling: cellular insights into the pathophysiology of bipolar disorder. *Biological Psychiatry*, **48**, 518–530.

__, Etcheberrigaray, R., Chen, G., *et al* (1993) Lithium dramatically decreases mebrane-associated PKC in the hippocampus: selectivity for the alpha isozyme. *Journal of Neurochemistry*, **61**, 2303–2310.

__, Potter, W. Z. & Lenox, R. H. (1995) Signal transduction pathways. Molecular targets for lithium's actions. *Archives of General Psychiatry*, **52**, 531–543.

__, Bersudsky, Y., Chen, G., *et al* (1996) Modulation of PKC isozymes and substrates by lithium: the role of myo-inositol. *Neuropsychopharmacology*, **15**, 370–382.

__, Moore, G. J. & Chen, G. (1999) Lithium at 50: have the neuroprotective effects of this unique cation been overlooked? *Biological Psychiatry*, in press.

__, Chen, G., Hsiao, J. K., *et al* (2000*a*) Regulation of signal transduction pathways by mood stabilizing agents: implications for the pathophysiology and treatment of bipolar affective disorder. In *Bipolar Medications: Mechanisms of Action* (eds H K. Manji, C. L. Bowden & R. H. Belmaker), pp. 129–177. Washington, DC: American Psychiatric Press.

__, Moore, G. J., Rajkowska, G., *et al* (2000*b*) Neuroplasticity and cellular resilience in mood disorders. Millennium article. *Molecular Psychiatry*, **5**, 578–593.

__, Drevets, W. C. & Charney, D. S. (2001) The cellular neurobiology of depression. *Nature Medicine*, **7**, 1–7.

Merry, D. E. & Korsmeyer, S. J. (1997) Bcl-2 gene family in the nervous system. *Annual Review of Neuroscience*, **20**, 245–267.

Moore, G. J., Bebchuk, J. M., Parrish, J. K., *et al* (1999) Temporal dissociation between lithium-induced CNS myo-inositol changes and clinical response in manic–depressive illness. *American Journal of Psychiatry*, **156**, 1902–1908.

__, __, Hasanat, K., *et al* (2000*a*) Lithium increases N-acetyl-aspartate in the human brain: in vivo evidence in support of bcl-2's neurotrophic effects? *Biological Psychiatry*, **48**, 1–8.

__, __, Wilds I. B., *et al* (2000*b*) Lithium induced increase in human grey matter. *Lancet*, **356**, 1241–1242.

Mork, A., Geisler, A. & Hollund, P. (1992) Effects of lithium on second messenger systems in the brain. *Pharmacology and Toxicology*, **71** (suppl. 1), 4–17.

Muller-Oerlinghausen, B., Ahrens, B., Grof, E., *et al* (1992) The effects of long-term lithium treatment on the mortality of patients with manic–depressive and schizoaffective illness. *Acta Psychiatrica Scandinavica*, **86**, 218–222.

Nahorski, S. R., Ragan, C. I. & Challiss, R. A. J. (1991) Lithium and the phosphoinositide cycle: an example of uncompetitive inhibition and its pharmacological consequences. *Trends in Pharmacological Sciences*, **12**, 297–303.

__, Jenkinson, S. & Challiss, R. A. (1992) Disruption of phosphoinositide signalling by lithium. *Biochemical Society Transactions*, **20**, 430–434.

Nestler, E. J. (1998) Antidepressant treatment in the 21st century. *Biological Psychiatry*, **44**, 526–533.

Nilsson, A. (1999) Lithium therapy and suicide risk. *Journal of Clinical Psychiatry*, **60** (suppl. 2), 85–88.

Nishizuka, Y. (1992) Intracellular signalling by hydrolysis of phospholipids and activation of protein kinase C. *Science*, **258**, 607–614.

Nonaka, S., Hough, C. J. & Chuang, D. M. (1998) Chronic lithium treatment robustly protects neurons in the central nervous system against excitotoxicity by inhibiting *N*-methyl-D-aspartate receptor-mediated calcium influx. *Proceedings of the National Academy of Science USA*, **95**, 2642–2647.

Nurnberger, J. I. & Berrettini, W. (1997) *Psychiatric Genetics*. London: Chapman & Hall.

O'Connor, D. T., Kailasam, M. T. & Parmer, R. J. (1996) Complex trait genetics: new methods yield a result for essential hypertension. *Journal of Clinical Investigation*, **97**, 1997–1998.

Ozaki, N. & Chuang, D. M. (1997) Lithium increases transcription factor binding to AP-1 and cyclic AMP-responsive element in cultured neurons and rat brain. *Journal of Neurochemistry*, **69**, 2336–2344.

Philbert, R. A., Egeland, J. A., Paul, S. M., *et al* (1997) The inheritance of bipolar affective disorder: abundant genes coming together. *Journal of Affective Disorders*, **43**, 1–3.

Pontzer, N. J. & Crews, F. T. (1990) Desensitisation of muscarinic stimulated hippocampal cell firing is related to phosphoinositide hydrolysis and inhibited by lithium. *Journal of Pharmacology and Experimental Therapeutics*, **253**, 921–929.

Post, R. M., Weiss, S. R., Clark, M., *et al* (2000) Lithium, carbamazepine, and valproate in affective illness: biological and neurobiological mechanisms. In *Bipolar Medications: Mechanisms of Action* (eds H. K.

https://doi.org/10.1192/bjp.178.41.s107 Published online by Cambridge University Press

Manji, C. L. Bowden & R. H. Belmaker), pp 219–248. Washington, DC: American Psychiatric Press.

Rajkowska, G. (2000) Postmortem studies in mood disorders indicate altered numbers of neurons and glial cells. *Biological Psychiatry*, **48**, 766–777.

__, Miguel-Hidalgo, J. J., Wei, J., *et al* (1999) Morphometric evidence for neuronal and glial prefrontal cell pathology in major depression. *Biological Psychiatry*, **45**, 1085–1098.

Rana, R. S. & Hokin, L. E. (1990) Role of phosphoinositides in transmembrane signalling. *Physiological Reviews*, **70**, 115–164.

Risch, N. & Botstein, D. (1996) A manic depressive history. *Nature Genetics*, **12**, 351–353.

Ross, E. M. (1989) Signal sorting and amplification through G protein-coupled receptors. *Neuron*, **3**, 141–152.

Shenker, A. (1995) G protein-coupled receptor structure and function: the impact of disease causing mutations. *Baillière's Clinical Endocrinology and Metabolism*, **9**, 427–451.

Smith, M. A., Makino, S., Altemus, M., *et al* (1995) Stress and antidepressants differentially regulate neurotrophin 3 mRNA expression in the locus caeruleus. *Proceedings of the National Academy of Science USA*, **92**, 8788–8792.

Soares, J. C. & Mann, J. J. (1997) The functional neuroanatomy of mood disorders. *Journal of Psychiatric Research*, **1**, 393–432.

Spiegel, A. M. (1998) *G Proteins, Receptors, and Disease*. New Jersey: Humana Press.

__, Weinstein, L. S. & Shenker, A. (1993) Abnormalities in G protein-coupled signal transduction pathways in human disease. *Journal of Clinical Investigation*, **92**, 1119–1125.

Stabel, S. & Parker, P. J. (1991) Protein kinase C. *Pharmacology and Therapeutics*, **51**, 71–95.

Stambolic, V., Ruel, L. & Woodgett, J. R. (1996) Lithium inhibits glycogen synthase kinase-3 activity and mimics wingless signalling in intact cells. *Current Biology*, **6**, 1664–1668.

Taylor, C. W. (1990) The role of G proteins in transmembrane signalling. *Biochemical Journal*, **272**, 1–13.

Thibonnier, M. & Schork, N. J. (1995) The genetics of hypertension. *Current Opinion in Genetics and Development*, **5**, 361–370.

Tricklebank, M. D., Singh, L., Jackson, A., *et al* (1991) Evidence that a proconvulsant action of lithium is mediated by inhibition of myo-inositol phosphatase in mouse brain. *Brain Research*, **588**, 145–148.

Unlap, M. T. & Jope, R. S. (1997) Lithium attenuates nerve growth factor-induced activation of AP-1 DNA binding activity in PC12 cells. *Neuropsychopharmacology*, **17**, 12–17.

Van den Boogaart, A., Ala-Korpela, M., Jokisaari, J., *et al* (1994) Time and frequency domain analysis of NMR data compared: an application to 1D 1H spectra of lipoproteins. *Magnetic Resonance in Medicine*, **31**, 347–358.

Wagner, U., Utton, M., Gallo, J. M., *et al* (1996) Cellular phosphorylation of tau by GSK-3beta influences tau binding to microtubules and microtubule organisation. *Journal of Cell Science*, **109**, 1537–1543.

CLINICAL IMPLICATIONS

- Greater understanding of the molecular and cellular mechanisms of action of mood-stabilising agents will enhance the rationale for the development of new treatments targeting intracellular targets.
- The long-term therapeutic effects of mood-stabilising agents may involve underappreciated neurotrophic effects.

LIMITATIONS

- As yet, there are no phenotypical changes in rodent studies that are clearly associated with treatment response.
- Most of the studies have been conducted in 'normal' rodents.
- Bipolar disorder undoubtedly represents a heterogeneous group of disorders, and current studies do not adequately address this.

HUSSEINI K. MANJI, FRCPC, GUANG CHEN, PhD, GREGORY J. MOORE, PhD, Laboratory of Molecular Pathophysiology, Wayne State University School of Medicine, Detroit, Michigan, USA

Correspondence: Dr Husseini K. Manji, Director, Laboratory of Molecular Pathophysiology, National Institute of Mental Health, Bld 49, Room B1EE16, 49 Convent Drive, MSC 4405, Bethesda, MD 20892, USA. Tel: +1 301 496 0373; fax +1 301 480 0123; e-mail: manjih@intra.nimh.nih.gov

Wang, H. Y. & Friedman, E. (1989) Lithium inhibition of protein kinase C activation induced serotonin release. *Psychopharmacology (Berlin)*, **99**, 213–218.

__ & __ (1996) Enhanced protein kinase C activity and translocation in bipolar affective disorder brains. *Biological Psychiatry*, **40**, 568–575.

Wang, J. F., Young, L. T., Lip, P. P., *et al* (1997) Signal transduction abnormalities in bipolar disorder. In *Bipolar Disorder: Biological Models and Their Clinical Application* (eds R. T. Joffe & L. T. Young), pp. 41–79. New York: Marcel Dekker.

Wang, Q., Stacy, T., Miller, J. D., *et al* (1996) The CBFbeta subunit is essential for CBF-alpha2 (AML1) function in vivo. *Cell*, **87**, 697–708.

Wang, S., Wang, Q., Crute, B. E., *et al* (1993) Cloning and characterisation of subunits of the T-cell receptor and murine leukemia virus enhancer core-binding factor. *Molecular and Cellular Biology*, **13**, 3324–3339.

Warsh, J. J., Young, L. T. & Li, P. P. (2000) Guanine nucleotide binding (g) protein disturbances in bipolar affective disorder. In *Bipolar Medications: Mechanisms of Action* (eds H. K. Manji, C. L. Bowden & R. H. Belmaker), pp. 299–329. Washington, DC: American Psychiatric Press.

Watson, D. G., Watterson, J. M. & Lenox, R. H. (1998) Sodium valproate down-regulates the myristoylated alanine-rich C kinase substrate (MARCKS) in immortalized hippocampal cells: a property of protein kinase C-mediated mood stabilizers. *Journal of Pharmacological and Experimental Therapeutics*, **285**, 307–316.

Weinstein, L. S. (1994*a*) Defective G proteins in human disease. In *G Proteins* (eds A. M. Speigel, T. L. Z. Jones, W. F. Simmonds, *et al*), pp. 107–117. Austin, TX: R. G. Landes.

__ (1994*b*) Alteration of G protein expression or function in pathophysiology. In *G Proteins* (eds A. M. Spiegel, T. L. Z. Jones, W. F. Simmonds, *et al*), pp. 118–128. Austin, TX: R. G. Landes.

__ & Shenker, A. (1993) G Protein mutations in human disease. *Clinical Biochemistry*, **26**, 333–338.

Weng, G., Bhalla, U. S. & Lyengar, R. (1999) Complexity in biological signaling systems. *Science*, **284**, 92–96.

Williams, M. B. & Jope, R. S. (1995) Circadian variation in rat brain AP-1 DNA binding activity after cholinergic stimulation: modulation by lithium. *Psychopharmacology*, **122**, 363–368.

Yost, C., Torres, M., Miller, J. R., *et al* (1996) The axis-inducing activity, stability, and subcellular distribution of beta catenin is regulated in Xenopus embryos by glycogen synthase kinase 3. *Genes and Development*, **10**, 1443–1454.

Yuan, P. X., Chen, G. & Manji, H. H. (1998) Lithium stimulates gene expression through the AP-1 transcription factor pathway. *Molecular Brain Research*, **58**, 225–230.

__, __ & __ (1999) Lithium activates the c-Jun NH_2-terminal kinases (JNKs) in vitro and in the CNS in vivo. *Journal of Neurochemistry*, **73**, 2299–2309.

https://doi.org/10.1192/bjp.178.41.s107 Published online by Cambridge University Press